Measuring circuit

The circuit operates by measurement of pulse-width differences, the principle of which is shown in Fig. 3. It has two synchronized multivibrators M_1 and M_2, connected respectively to a trimmer capacitor C_T and to the humidity sensor of capacitance C_s. Capacitance C_s comprises a constant contribution C_o and a contribution ΔC dependent upon H_{rel}, i.e. $C_s = C_o + \Delta C$.

Multivibrators M_1 and M_2 produce pulses of duration t_1 and t_2 proportional to C_T and C_s respectively (Fig. 4). The pulse width difference t_3 is equal to $t_2 - t_1$.

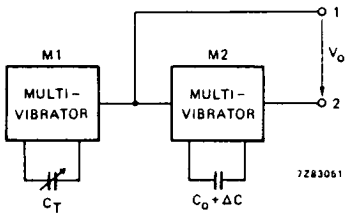

Fig. 3 Operating principle of the measuring circuit. The circuit generates pulses with durations proportional to trimmer capacitance C_T and to sensor capacitance $C_s = C_o + \Delta C$. If C_T is set equal to C_o, then the pulse width difference is proportional to ΔC, i.e. to the humidity-dependent capacitance.

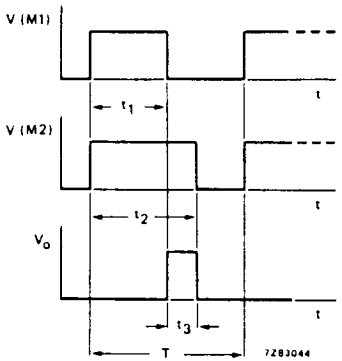

Fig. 4 Formation of pulses in the circuit of Fig. 3.

If M_1 and M_2 have equal proportionality contants and C_T is equal to C_o, t_3 will be proportional to ΔC. If the pulse frequency is set at $1/T$, where $T = 2t_1$ (Fig. 4) and all pulses have equal amplitude V_B, then the mean output voltage will be:

$$\bar{V}_o = (t_3/T)V_B = (\Delta C/2C_o)V_B.$$

The term t_3/T is called the *relative pulse width*. Its temperature and voltage dependence are very small provided:

- the characteristics of both multivibrators are identical (constructed for example from a single LOCMOS circuit HEF4001B);
- C_s and C_T have equal temperature coefficients.

Output voltage $\bar{V}_o$ is directly related to the supply voltage which should therefore be stabilized for best results.

Practical circuit

Figure 5 shows a design based upon two integrated LOCMOS circuits HEF4001B. Depending upon its application the circuit may be either battery or mains powered.

Multivibrators M_1 and M_2 are each formed by a pair of NOR gates in the first LOCMOS circuit. 10 kHz pulses produced by M_1 and M_2 are fed to the second LOCMOS circuit which produces a pulsed-output voltage with an average value V_o proportional to the pulse width difference. The four NOR gates of this circuit are connected in parallel to provide low output impedance. An RC network in the supply line suppresses parasitic oscillations in the circuit.

Linearizing network

Because the relation between C_s and H_{rel} is non-linear, the pulsed output signal $\bar{V}_o$ is fed to a linearizing network; for explanation this is shown separately in Fig. 6. Voltage pulses charge capacitor C via diode D and resistor R_1. At the same time a discharge current proportional to the voltage across the capacitor flows through resistor R_2, and an additional current flows from the supply line via resistor R_3. The output voltage V_o' is thus a non-linear function of $\bar{V}_o$, and with suitable choice of C, R_1 and R_2, this function can be so profiled that the relationship between H_{rel} and V_o' is made substantially linear.

In the circuit of Fig. 5, the output voltage can vary between 80 mV and 1 V. This voltage can be used either to indicate or to control relative humidity.

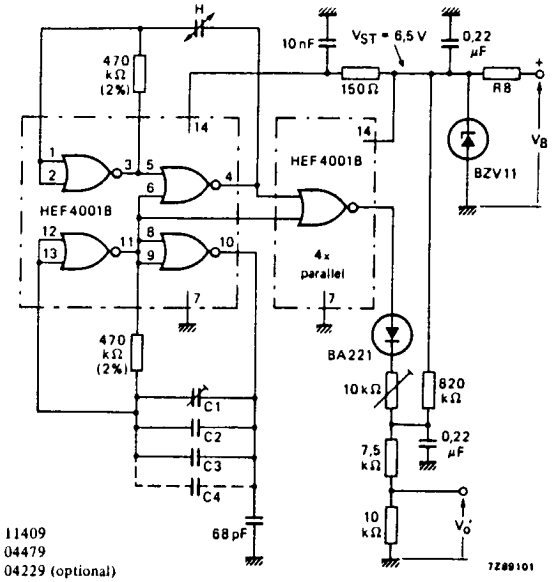

C1 = 3 to 40 pF 2222 808 11409
C3 = C2 = 47 pF P 100 2222 632 04479
C4 = 22 pF P 100 2222 632 04229 (optional)

H = HUMIDITY SENSOR 2322 691 90001

Fig. 5 Measuring circuit with linearized output. The circuit is suitable for connection to an external power supply. In this circuit R_8 is chosen so that $R_8 \approx (V_B - V_{ST})/2$ mA Ω.

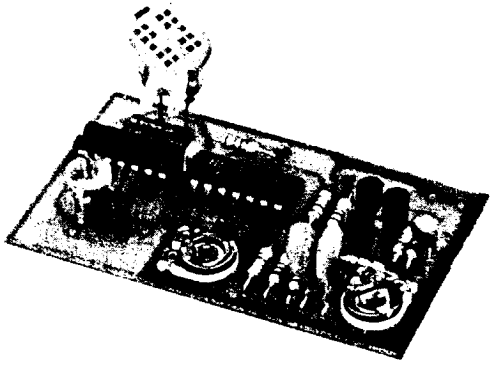

Component layout of the measuring circuit shown in Fig. 5. (including a stabilized power supply)

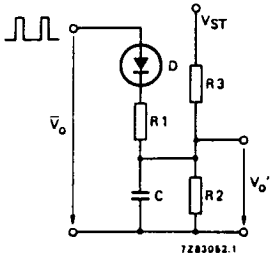

Fig. 6 Linearizing network used in Fig. 5.